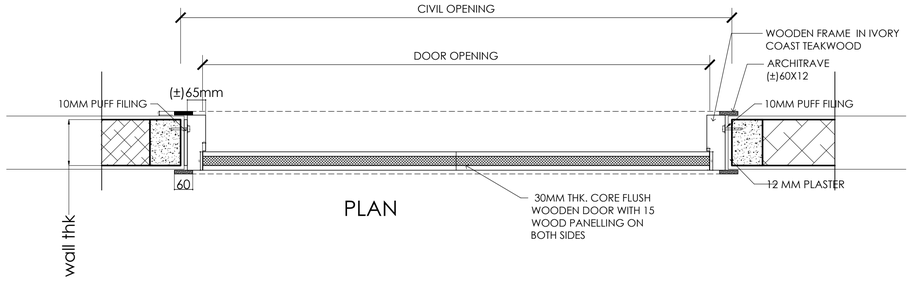

PLAN

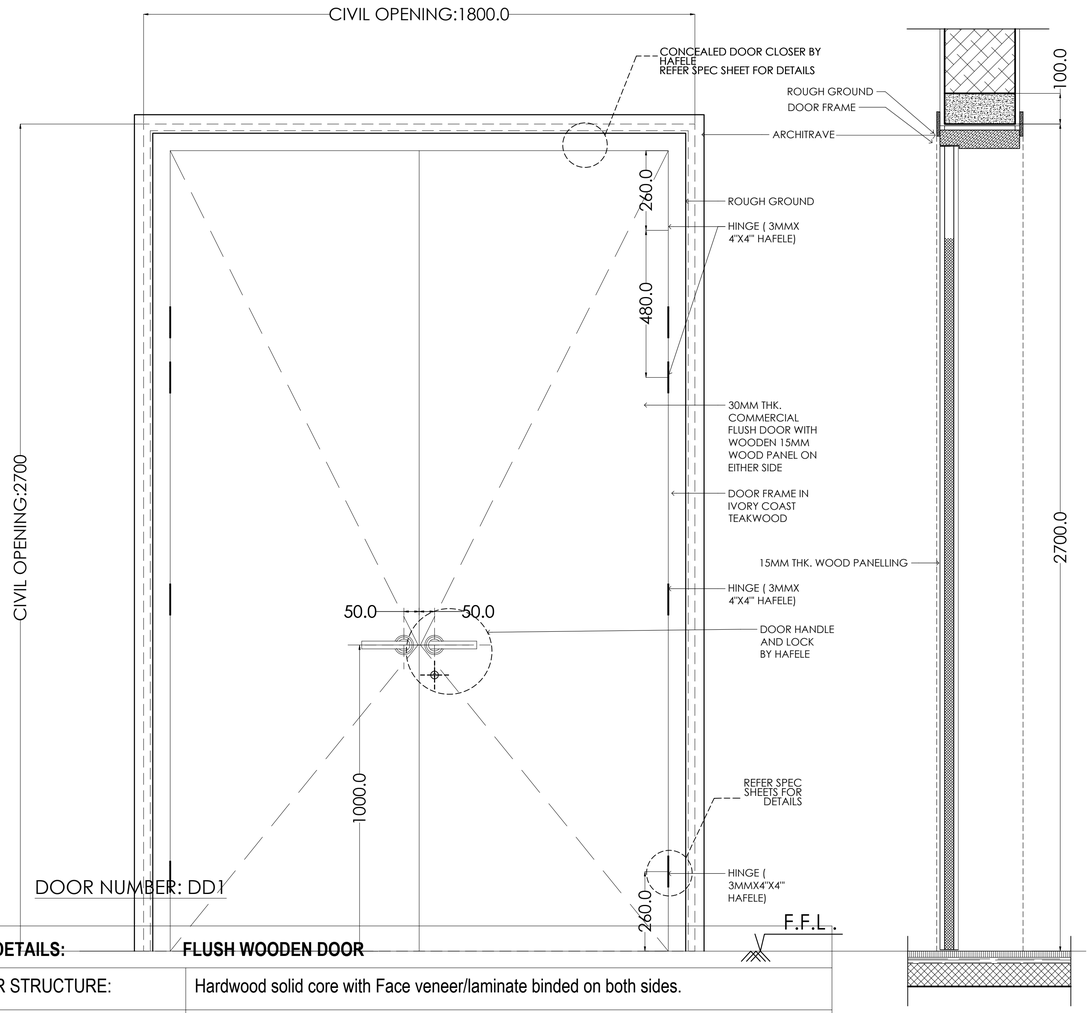

DOOR NUMBER: DD1

DD1 DESIGN INTENT: NDELEBE CARVING ON FRONT DOOR

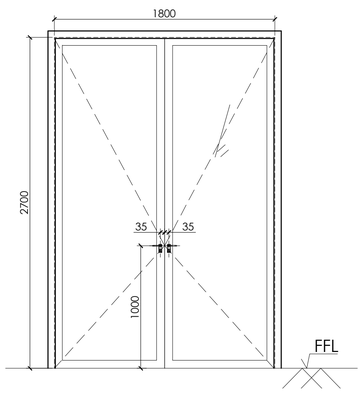

DOOR NUMBER: DD1

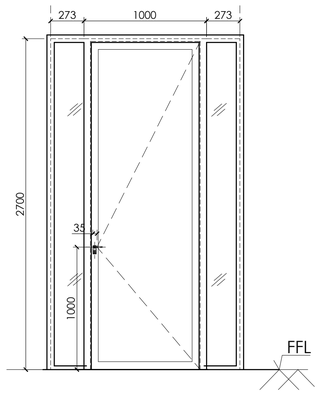

DOOR NUMBER: MD1

OPENING DETAILS: **FLUSH WOODEN DOOR**

1.	DOOR STRUCTURE:	Hardwood solid core with Face veneer/laminate binded on both sides.
2.	DOOR SKIN:	15mm thk Solid wood panelling Hot pressed Pasted on both sides.
3.	DOOR FINISH:	Melamine Polish
4.	DOOR FRAME STRUCTURE:	White Ash Wood
5.	DOOR FRAME FINISH:	Melamine Polish.

HARDWARE SPECIFICATIONS:

1.	HINGE:	4"x4"x3mm SS Butt Hinge 4nos	4.	DOOR CLOSER:	Concealed Door Closer as per Specification sheet
2.	HANDLE:	Brass lever handle on round rose with euro profile cylinder	5.	DOOR SEAL:	Slam proof Rubber seal
3.	LOCK:	SS Mortise Lock	6.	DOOR FIRE RATING:	

SCALE - 1:NTS A1 SIZE

NOTES :

This drawing is the property of M/s. SPACES ARCHITECTURE STUDIO and it shall not be used, reproduced or modified without written permission.
The drawing shall not be scaled, only written dimensions shall be followed.
This drawing supercedes all previous drawings issued for the information contained in the drawing.
All discrepancies shall be brought to the notice of the architects before execution of the work.
Any modifications at site w/o prior written information to the Architect are the responsibility of the Owner.

CONSTRUCTION NOTES :

1. ALL OPENINGS SHALL HAVE A 100 MM RCC JAMB; REFER TO JAMB DETAILS.
2. ALL OPENING SIZES PROVIDED ARE ROUGH OPENING SIZES

LEGENDS :

S.NO.	DOOR	SIZE	SILL LVL	LINTEL LVL
1	MD1	1545	100	2800
2	D1	900	100	2500
3	D1"	1020	100	2500
4	D2	960	100	2500
5	D2"	900	200	2200
6	D3	1065	100	2500
7	D3'	960	100	2500
8	D3"	1100	100	2500
9	D4	2570	100	2500
10	D5	1300	100	2800
11	DD1	1800	100	2800
12	DD3	1800	100	2500
13	PD1	650	100	2500
14	PD2	1000	100	2500

NOTE: ALL DIMENSIONS ARE ROUGH SIZE OPENINGS

REVISION NOTES :

No.	DETAIL	DESCRIPTION

PROJECT:

SOUTH AFRICA HIGH COMMISION

PROJECT OWNER/ DEVELOPER:

INTERNATIONAL RELATIONS & COOPERATION, REPUBLIC OF SOUTH AFRICA

ARCHITECT:

Spaces Architecture Studio
V-12/23 DLF-3, Gurugram.
Ph.: 0124-4734320
e-mail: contact@studiosas.in
https://www.studiosas.in

CONSULTANT:

PURPOSE OF DWG:

- [x] Issued for Tender
- [ ] Issued for Construction
- [ ] Issued for Review
- [ ] Issued for Information

DRAWING TITLE:

WOODEN DOOR DETAILS

DISCIPLINE : ARCHITECTURE | 16.10.25

DRAWING NO: SAS/SA/STAGE4/A (RES.)8.2.2 | REV:

N